PERFORMANCE®

XPORT™

Traveler 1 1/4" Receiver Hitch Foot

Thank you for purchasing the XPORT 1 1/4" Receiver Hitch Foot. When used with an XPORT Traveler Upright, this Hitch Foot provides a stable base for carrying 2 or 3 bicycles.

Please read all instructions for Assembly and Installation to Vehicle before using your XPORT Hitch rack.

Notes:

1. The XPORT 1 1/4" Receiver Hitch Foot is designed to be used with XPORT Upright Hitch Racks. Instructions for attachment of the Hitch to the Upright is included with the Upright assembly instructions.

2. The minimum vehicle hitch requirement is a Class 1, bolted to the chassis.

CAUTION: IT IS THE USER'S RESPONSIBILITY TO INSURE THE SAFE AND PROPER USE OF THIS PRODUCT!
Improper attachment or misuse of this Hitch Foot or rack may result in damage to the bicycles, your vehicle or the vehicles behind you on the road.

Contents

Part	*Part Code*	*QTY*
Hitch Foot	A	1
1" Hex Bolt	B	1
Washer	C	1

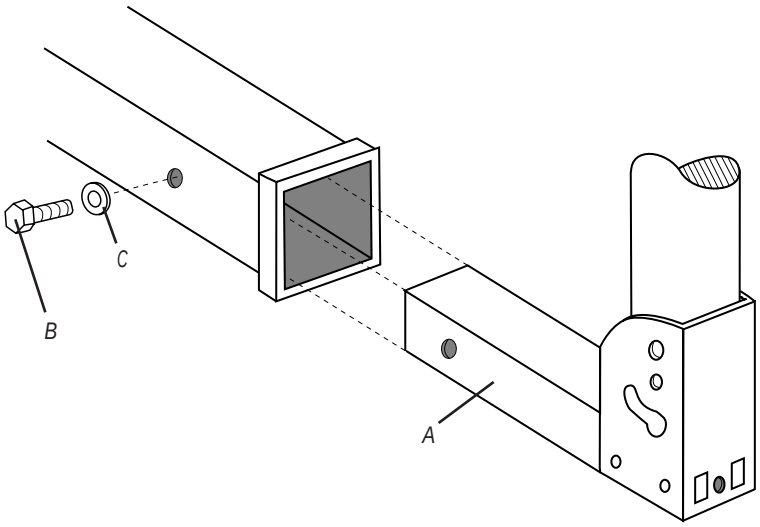

Assembly

See the instructions included with your Hitch Rack Upright for assembly of the Hitch Foot to the Upright Bike Tube.

Attachment to Vehicle

1. Insert the Hitch Foot (A) into the receiver hitch.

2. Align the Hitch Foot bolt hole with the hole in the receiver hitch. Thread the 1" Hex Bolt (B) through the Washer (C) and into the bolt hole in the receiver hitch.

3. Tighten securely (40-50 ft-lbs).

4. Double check the tightness of the Hex Bolt (B) after the first 10 minutes of travel and occasionally during a trip.

Performance Tech Support 1(800)727-2453
9am-6pm EST Monday-Friday

Performance, Inc.
One Performance Way
Chapel Hill, NC 27514
Made in USA
www.performancebike.com